OSCAR prices 2023 in Velutto

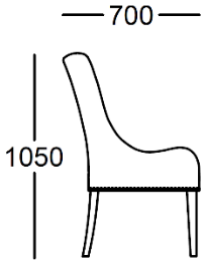

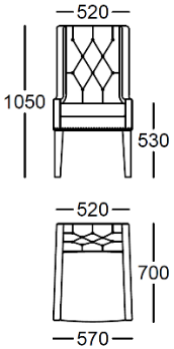

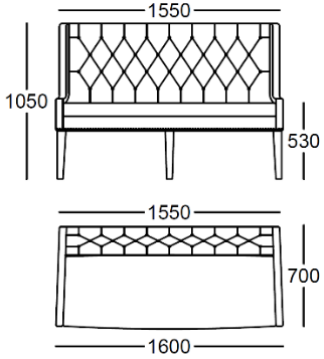

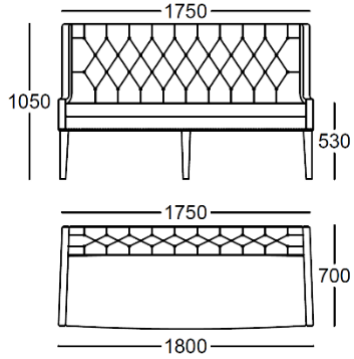





Chair

Art. 19.01

0.39 m3

Bench 160 cm

Art. 19.02

0,58 m3

Bench 180 cm

Art. 19.03

0,65 m3

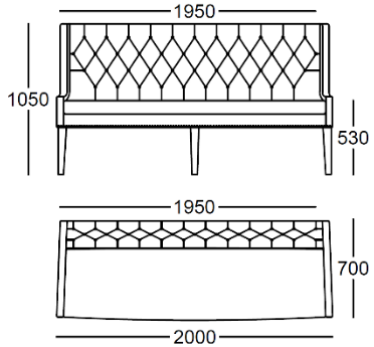

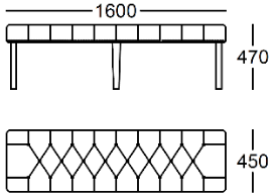

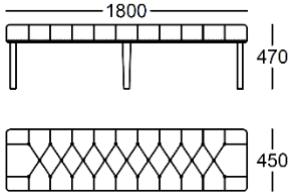

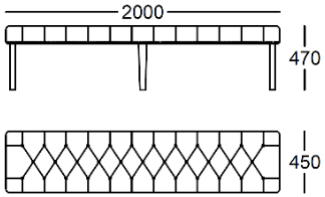

Bench 200 cm

Art. 19.04

0,72 m3

Stool 160 cm

Art. 19.05

0,20 m3

Stool 180 cm

Art. 19.06

0,21 m3

Stool 200 cm

Art. 19.07

0,22 m3